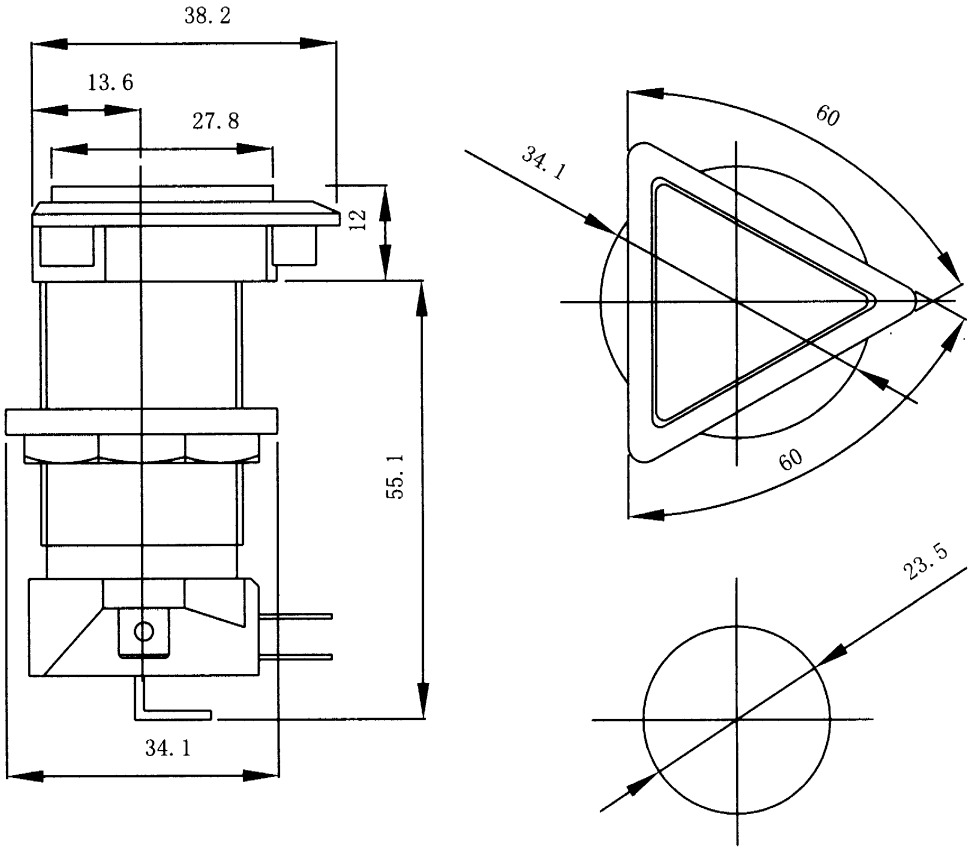
38.2
13.6
27.8
12
55.1
34.1
60
34.1
60
23.5